S4

Dual Speaker Siren System

w/ SW300-1 Control Panel & Mic Set

12VDC

ECE R10

FEATURES

- Dual speaker system: Master unit with optional Slave unit.
- Remote controlled compact 30W Siren Amplifier w/ Speaker.
- Superb performance with 120dB Sound Pressure Level at 3.5M.
- Two 5A Aux Outputs, for all required warning light controls.
- Built-in selecable European Siren Tones with Air Horn.
- Remote 3-button Control Panel (SW300-1) with Rubber-touch Tactile Switch and LED backlight.
- Built-in European Siren Interlock.
- Night time sound dimming.
- Optional Handheld or Clip-on PA Microphone.

SPECIFICATIONS

SAS32R-MS Siren Amplifier & Speaker Unit:

Compliance: ECE R10
IP Rating: Siren IPX6; Speaker IPX4K
Operating Voltage: 11~16VDC
Max. Power (Speaker): 30W
Max. Current (Master Siren): 4.5A @ 13.6VDC
Standby Current: 0.2~0.3A
Aux Output: Max 5.0A x 2 @ 12VDC
Audio Range: 362Hz~1592Hz
Cable & Wires:

Master Unit:
Power Cable (550mm), 6 x 18AWG
Function Cable (550mm), 8 x 24AWG

Slave Unit:
Power Cable (250mm), 2 x 24AWG

Fuse Rating (Master Unit): 20A by +VDC
Storage Temp.: -25˚C ~ +55˚C
Operating Temp.: -25˚C ~ +50˚C
Warranty: Siren Amplifier - 2 Years
Speaker - 1 Year
Microphone Set - 1 Year

SW300-1 Control Panel:

Current Output: 3 x 0.01A
Power & Control Cable: 500mm
IP Rating: IPX5
Warranty: 1 Year

Microphone:

Type: Dynamic Microphone
Rate Impedence: 600 Ohm ± 15%
IP Rating: IPX4
Cable & Wires: Handheld Mic (420mm)
Clip-on Mic (490mm)
Storage Temp.: -25˚C ~ +55˚C
Operating Temp.: -25˚C ~ +50˚C
Warranty: 1 Year

TONE GROUP CHART

#	Tone Group	Tone	Hz
1	EE911 CUSTOMIZED SOUNDS FOR ISRAELI POLICE STANDARDS	WAIL	759-1592
		YELP	759-1592
		HORN	450-600

EE911®
A.A IMPORT AND MARKETING LTD.
www.ee911.co.il | info@ee911.co.il
Tel: 02-5906222 | Fax: 077-3181911

DIMENSIONS

SAS32R-MS Speaker Siren (Master / Slave Unit)

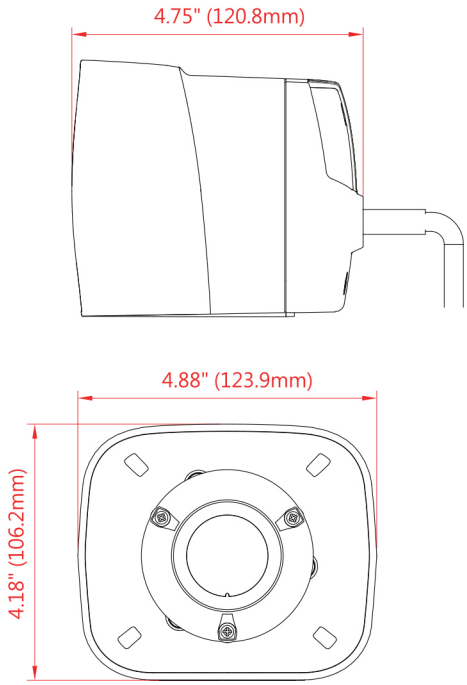

SW300-1 Control Panel

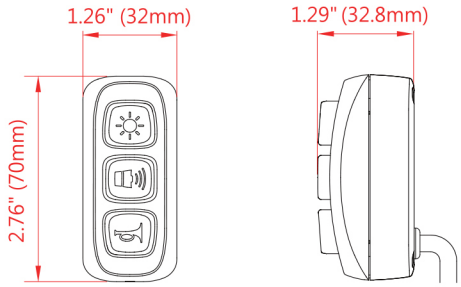

Microphone

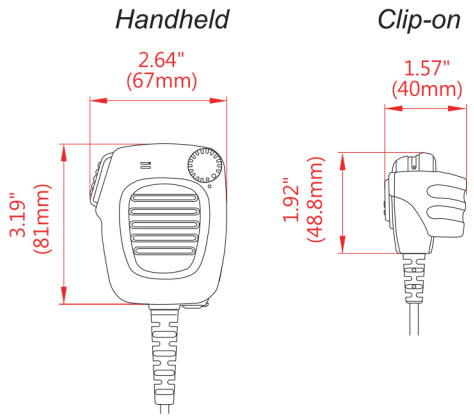

PART NO.

SAS32R-MS Dual Speaker Siren System w/ SW300-1 Control Panel w/ Handlebar Mount Bracket & Mic Set

- **S004-20010-00R** (Handheld Mic Set)
- **S004-20011-00R** (Handheld Mic Set, ECE R10)
- **S004-10010-00R** (Clip-on Mic Set)
- **S004-10011-00R** (Clip-on Mic Set, ECE R10)

ACCESSORY

SAS32R-M Master Unit Only

- **99-S004X00-000**
- **99-S004X06-000** (ECE R10)

SAS32R-S Slave Unit Only

- **99-S004X01-000**

SW300-1 Control Panel Only

- **99-S004X02-000** (w/ Handlebar Mount Bracket)
- **99-S004X03-000** (Surface Mount w/o Bracket)

Mic Set Only

- **99-S004X04-000** (Handheld)
- **99-S004X05-000** (Clip-on)